ARTWORK APPROVAL FORM

ORDER DETAILS

ORDER NUMBER:	X
ITEM CODE:	MO2133
QUANTITY:	X

ITEM DETAILS

MATERIAL:	PAPER
PUZZLE SIZE:	610 x 460 mm
BOX SIZE:	ca. 19,7 x 19,7 x 5 cm
X:	X
X:	X

MATERIAL COLOURS

PUZZLE PAPER:	NATURAL CARDBOARD + WHITE PAPER LAYER ON TOP
BOX PAPER:	WHITE
X:	X
X:	X
X:	X

SCALE 1:5

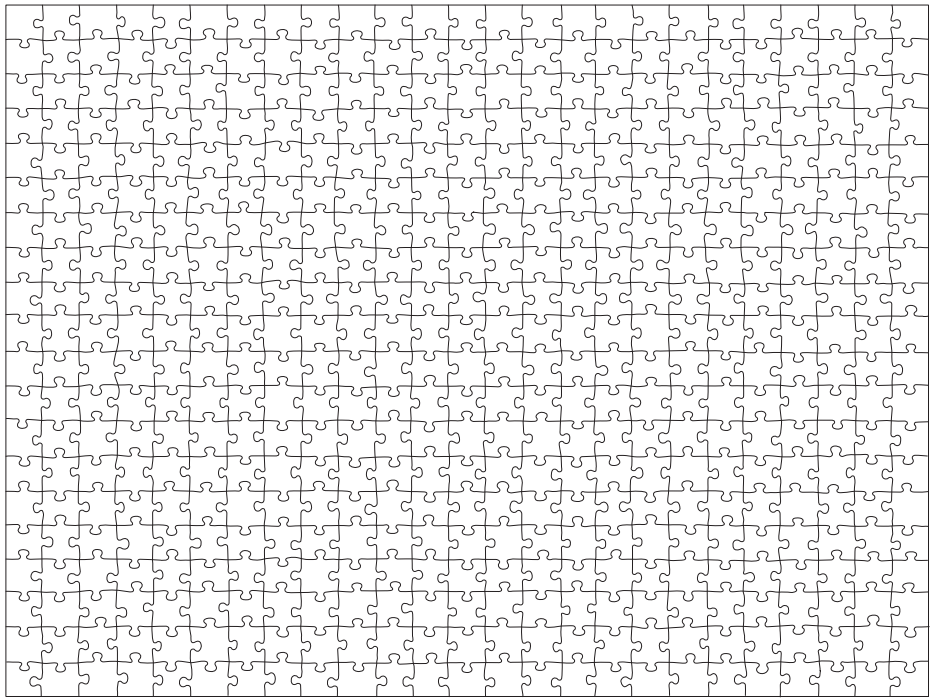

PUZZLE

TECHNIQUE	**FULL COLOUR**
LOGO	**CMYK**
SIZE	**ALL OVER**

ATTENTION 1

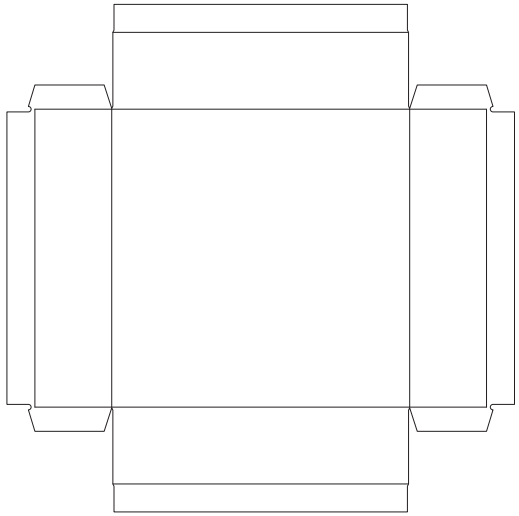

BOX

TECHNIQUE	**FULL COLOUR**
LOGO	**CMYK**
SIZE	**ALL OVER**

ATTENTION 1

yourChoice

GENERAL COMMENT:
DUE TO THE NATURE OF FULL COLOUR PRINTING THE OUTCOME OF THE FINAL COLOUR RESULT CAN BE SLIGHTLY DIFFERENT IN A REAL SAMPLE.

ATTENTION 1:

GENERAL COMMENT:

ATTENTION 2:

MO2133

500 PIECE PUZZLE IN BOX

Material: Paper
Technique: Full colour
Puzzle size: 610 x 460 mm
Box size: ca. 19,7 x 19,7 x 5 cm

SCALE 1:1

PUZZLE PAPER - STANDARD COLOUR

NATURAL CARDBOARD + WHITE PAPER LAYER ON TOP

BOX PAPER - STANDARD COLOUR

WHITE

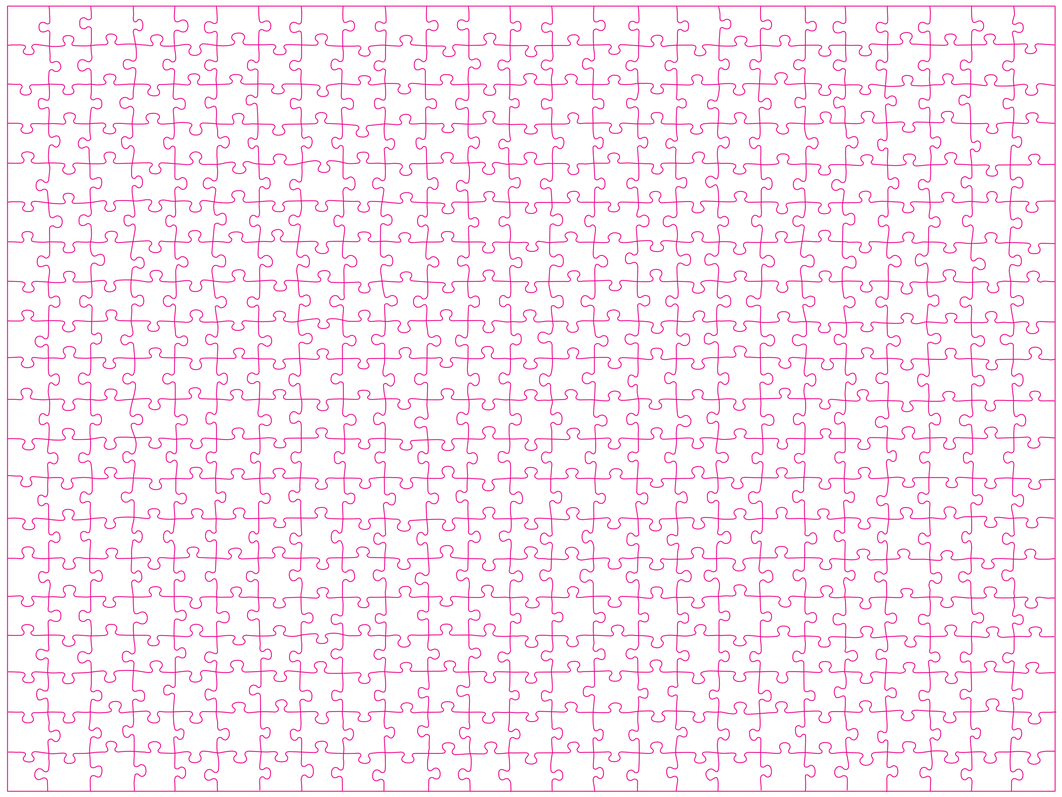

PUZZLE

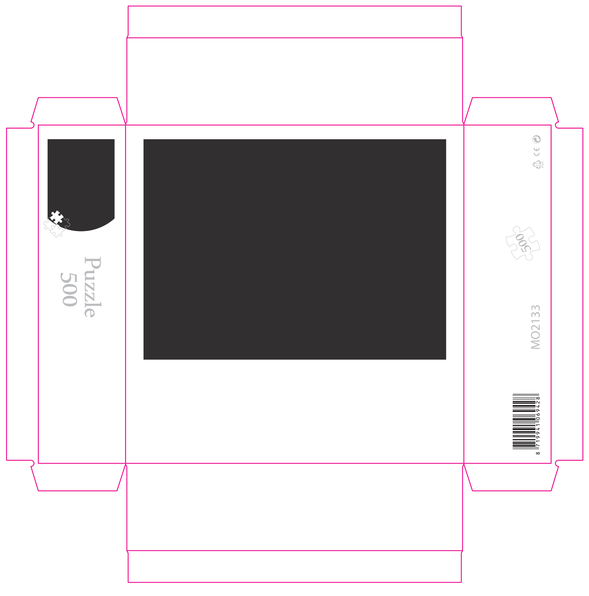

BOX

LEGEND:

FINISHED COMPONENT